UNIVERSITY OF CAMBRIDGE INTERNATIONAL EXAMINATIONS
General Certificate of Education
Advanced Subsidiary Level and Advanced Level

CANDIDATE NAME	
CENTRE NUMBER	
CANDIDATE NUMBER	

0763759056

PHYSICS **9702/33**

Advanced Practical Skills 1 **October/November 2011**

2 hours

Candidates answer on the Question Paper.

Additional Materials: As listed in the Confidential Instructions.

READ THESE INSTRUCTIONS FIRST

Write your Centre number, candidate number and name on all the work you hand in.
Write in dark blue or black pen.
You may use a soft pencil for any diagrams, graphs or rough working.
Do not use staples, paper clips, highlighters, glue or correction fluid.
DO **NOT** WRITE IN ANY BARCODES.

Answer **both** questions.
You will be allowed to work with the apparatus for a maximum of one hour for each question.
You are expected to record all your observations as soon as these observations are made, and to plan the presentation of the records so that it is not necessary to make a fair copy of them.
You may lose marks if you do not show your working or if you do not use appropriate units.

Additional answer paper and graph paper should be used only if it becomes necessary to do so.
You are reminded of the need for good English and clear presentation in your answers.

At the end of the examination, fasten all your work securely together.
The number of marks is given in brackets [ ] at the end of each question or part question.

For Examiner's Use	
1	
2	
Total	

This document consists of **10** printed pages and **2** blank pages.

© UCLES 2011

BLANK PAGE

You may not need to use all of the materials provided.

For Examiner's Use

1 In this experiment you will determine the resistivity of a metal in the form of a wire.

(a) (i) Measure and record the diameter d of the short sample of wire that is attached to the card. You may remove the wire from the card.

d = ... [1]

(ii) Calculate the cross-sectional area A of the wire, in m^2, using the formula

$$A = \frac{\pi d^2}{4}.$$

A = ... m^2

(b) (i) Using the wire that is taped to the metre rule, set up the circuit shown in Fig. 1.1. Close the switch.

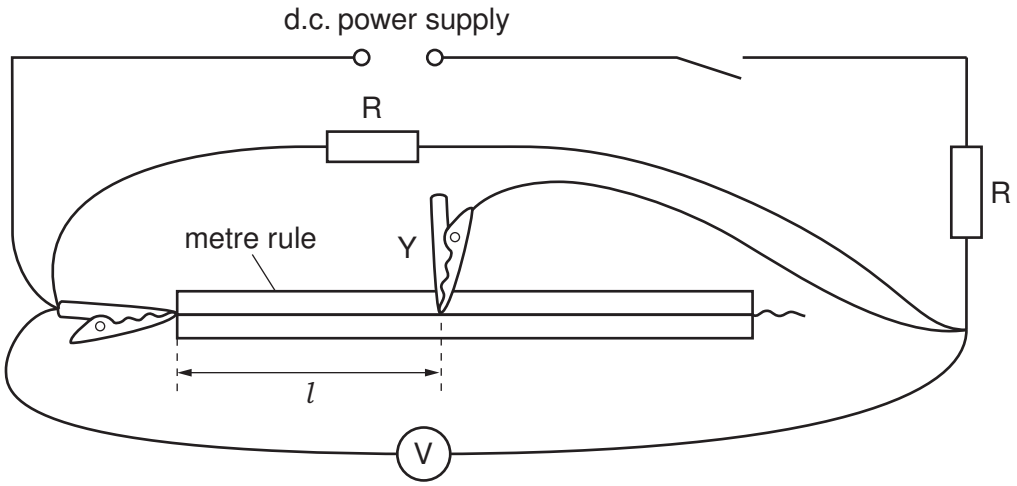

Fig. 1.1

(ii) Position the crocodile clip Y approximately half-way along the wire.

(iii) Measure and record the length l of wire between the two crocodile clips and the voltmeter reading V.

l = ...

V = ...

[1]

(c) By moving crocodile clip Y, change l and repeat **(b)(iii)** until you have six sets of readings of l and V for $l \geqslant 20$ cm. Include values of $\frac{1}{l}$ and $\frac{1}{V}$ in your table.

For Examiner's Use

[10]

(d) (i) Plot a graph of $\frac{1}{V}$ on the y-axis against $\frac{1}{l}$ on the x-axis. [3]

(ii) Draw the straight line of best fit. [1]

(iii) Determine the gradient and y-intercept of this line.

gradient = ...

y-intercept = ...

[2]

© UCLES 2011

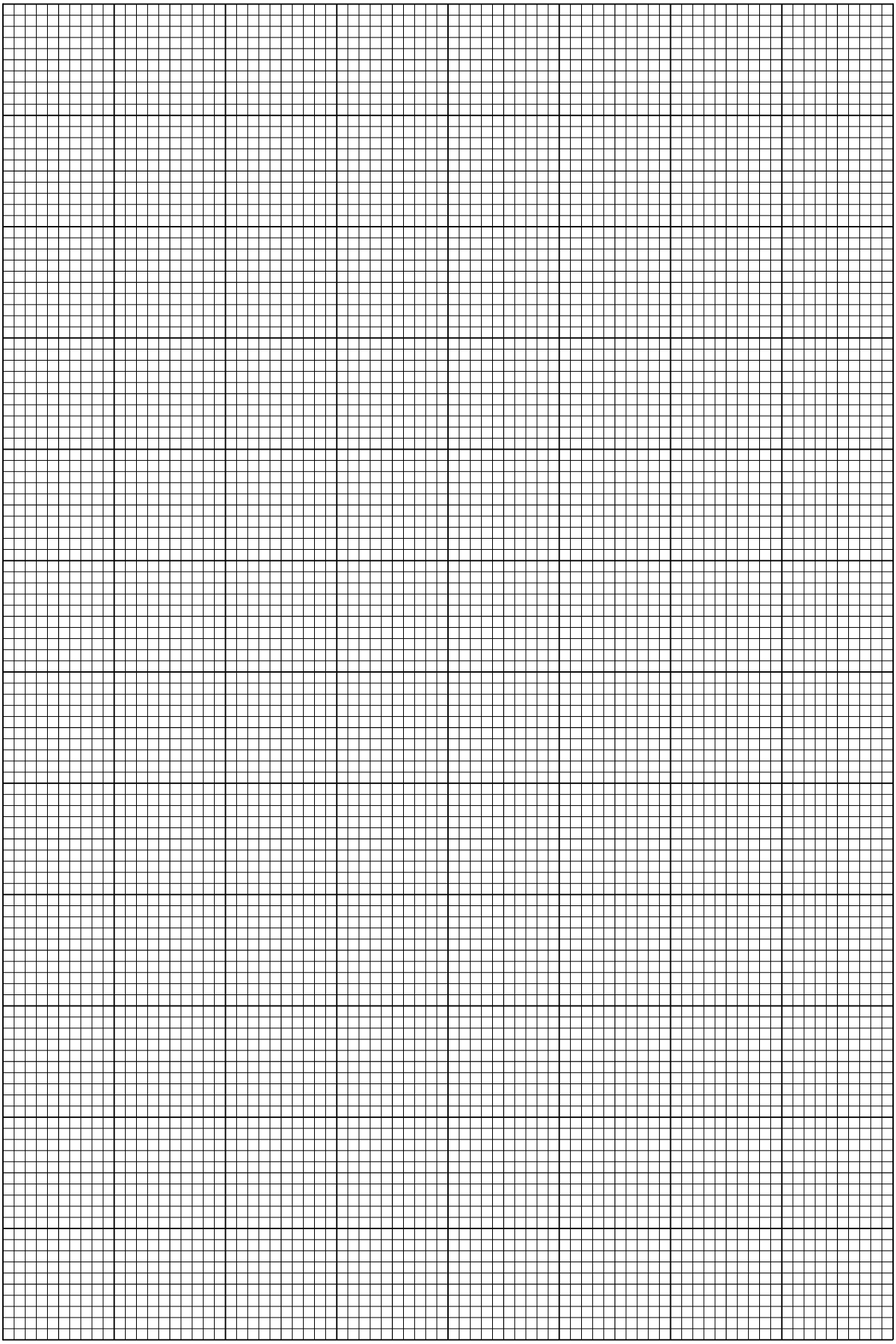

For Examiner's Use

(e) The quantities V and l are related by the equation

$$\frac{1}{V} = \frac{M}{l} + N$$

where M and N are constants.

For Examiner's Use

(i) Use your answers in **(d)(iii)** to determine values for M and N.

M = ... m V^{-1}

N = ... V^{-1}

[1]

(ii) The resistivity ρ of the material of the wire, in Ωm, can be found using the relationship

$$\rho = \frac{5\,A\,N}{M}.$$

Using your answers in **(e)(i)** and **(a)(ii)**, calculate a value for ρ.

ρ = ... Ωm [1]

BLANK PAGE

Please turn over for Question 2.

You may not need to use all of the materials provided.

For Examiner's Use

2 In this experiment you will investigate how the motion of a metre rule depends on the length of the string loops used to suspend it.

(a) Measure and record the width w of one of the metre rules, as shown in Fig. 2.1.

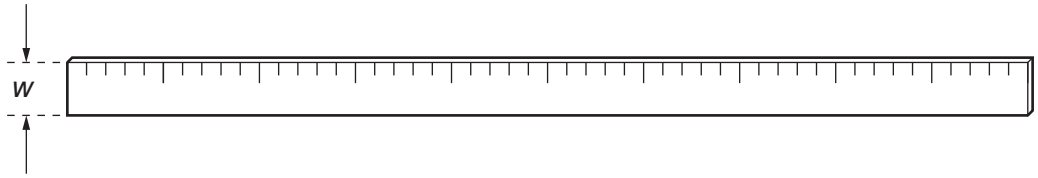

Fig. 2.1

w = ... cm [1]

(b) (i) Select the two longer pieces of string.

(ii) Tie the ends of one piece of string to make a loop.

(iii) Measure and record the length l of this loop, as shown in Fig. 2.2.

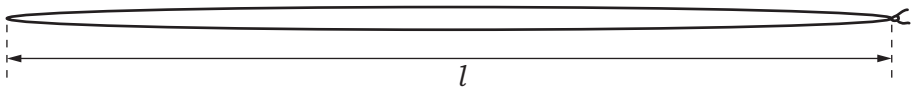

Fig. 2.2

l = ... [1]

(iv) Repeat **(ii)** with the other long piece of string. The length of this loop should be the same as that in **(iii)**.

© UCLES 2011

(c) (i) Use the stands to set up the two metre rules and the two loops of string as shown in Fig. 2.3.

For Examiner's Use

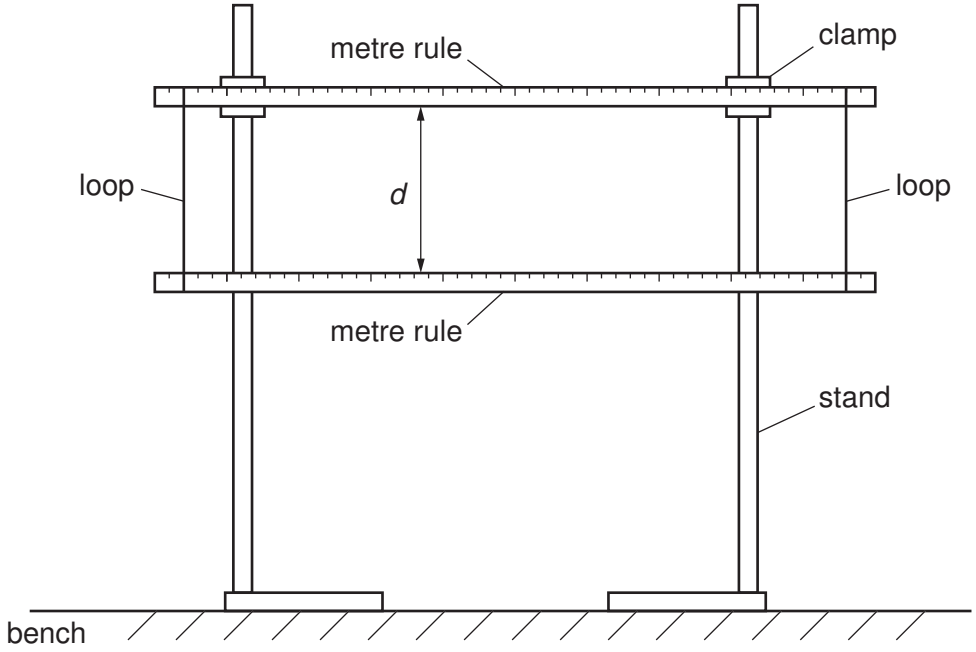

Fig. 2.3

The rules should be horizontal with the scale markings facing you.
The loops should be vertical, parallel to each other and placed at the 5 cm and 95 cm marks on both rules.

(ii) Using your values in **(a)** and **(b)(iii)**, determine the distance d using the relationship

$$d = l - 2w.$$

d = ... [1]

(iii) Estimate the percentage uncertainty in your value of d.

percentage uncertainty = ... [1]

(d) Move the left end of the bottom rule towards you and the right end away from you. Release the rule and watch the movement.
The left end of the rule will move away from you and back towards you, completing a swing.
The time taken for one complete swing is T.
By timing several of these complete swings, determine an accurate value for T.

For Examiner's Use

T = ... s [2]

(e) Repeat **(b)**, **(c)(i)**, **(c)(ii)** and **(d)** for the shorter lengths of string.

l = ... [1]

d = ...

T = ... s [2]

(f) It is suggested that the relationship between T and d is

$$T^2 = kd$$

where k is a constant.

For Examiner's Use

(i) Using your data, calculate two values of k.

first value of k = ...

second value of k = ...

[1]

(ii) Justify the number of significant figures that you have given for your values of k.

.....

.....

..... [1]

(iii) Explain whether your results support the suggested relationship.

.....

.....

.....

..... [1]

(g) (i) Describe four sources of uncertainty or limitations of the procedure for this experiment.

For Examiner's Use

1. .....

.....

2. .....

.....

3. .....

.....

4. .....

.....

[4]

(ii) Describe four improvements that could be made to this experiment. You may suggest the use of other apparatus or different procedures.

1. .....

.....

2. .....

.....

3. .....

.....

4. .....

.....

[4]

Permission to reproduce items where third-party owned material protected by copyright is included has been sought and cleared where possible. Every reasonable effort has been made by the publisher (UCLES) to trace copyright holders, but if any items requiring clearance have unwittingly been included, the publisher will be pleased to make amends at the earliest possible opportunity.

University of Cambridge International Examinations is part of the Cambridge Assessment Group. Cambridge Assessment is the brand name of University of Cambridge Local Examinations Syndicate (UCLES), which is itself a department of the University of Cambridge.